Pet Safety Seat™
Care & Use Guide

Thank you for purchasing the Solvit Pet Safety Seat. Check to make sure the contents include a fabric cover with tether in polybag; a three-panel plastic main Seat section; and the following plastic sections: Front Strut; Rear Strut; Right Wall; and Left Wall (name embossed on the side of each).

Assembly: (Make sure the smooth side of each plastic panel faces "in" and the side with round depressions faces "out"). Insert tab A on Front Strut into slot A in Left Wall and slide Front Strut in the direction of the arrow until tab A is in the fully locked position.

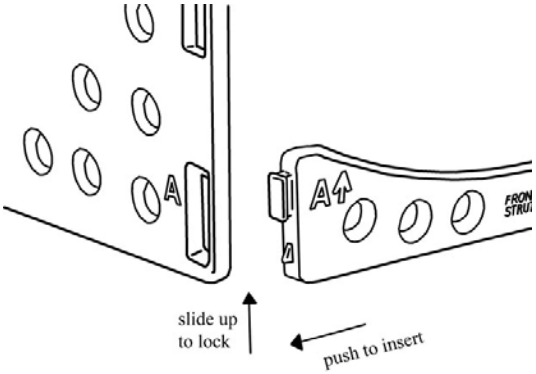

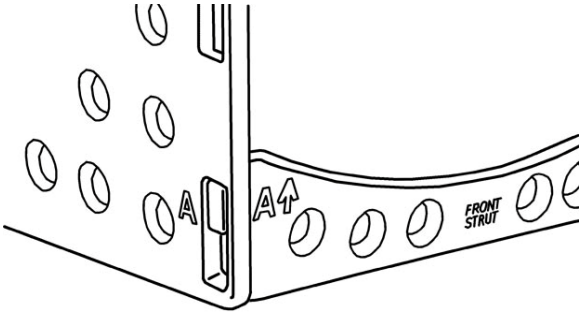

Repeat this procedure to lock tab B on Front Strut into slot B on Right Wall, and to lock tabs C and D on Rear Strut into slots C and D on the Left and Right Wall sections.

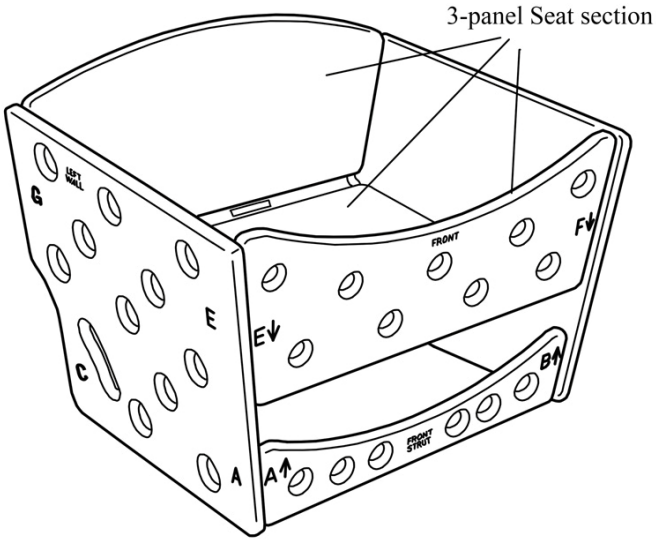

The main Seat section is a three-panel piece that was folded in a "Z" shape in the package. Before connecting to the Left and Right Wall sections, fold the Seat section into a "U" shape with the smooth sides facing "in". Insert double-tab E on the front panel of the Seat section into slot E on the Left Wall and slide to lock. Repeat for tab G then repeat for tabs F and H into the corresponding slots on the Right Wall.

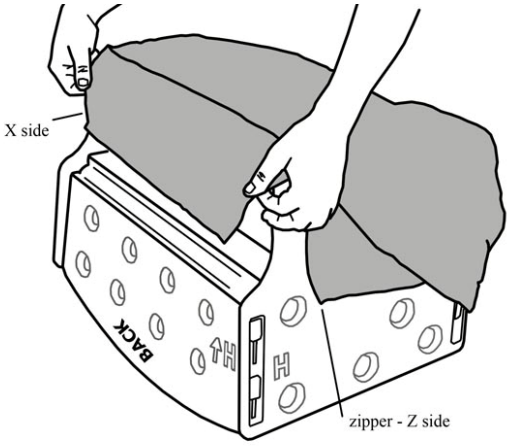

Place the assembled plastic frame upside-down on a clean surface. The Outer Fabric Shell has a zipper and small tags marked Z (next to zipper) and X (on opposite seam). With zipper in the fully open position, slide the fabric shell over the plastic frame so the Z seam aligns with the H corner at the back of the plastic frame and the X seam aligns with the G corner.

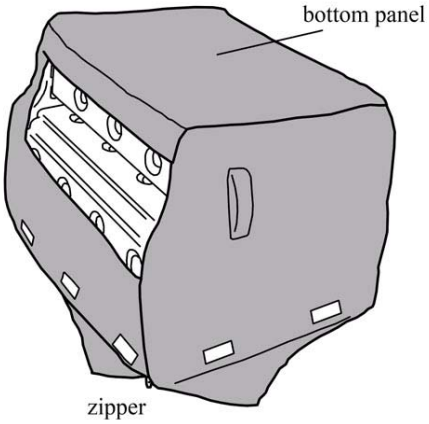

Pull the sides of the fabric shell down all four sides of the plastic frame until the rectangular bottom panel of the fabric shell aligns with the rectangular bottom of the plastic frame.

Turn the entire assembly right-side-up and pull the fabric shell up and over the top edges of the plastic seat, and close the zipper. The seat should now look like the image below and the two seat belt slits in the fabric shell should align with the holes in the plastic frame.

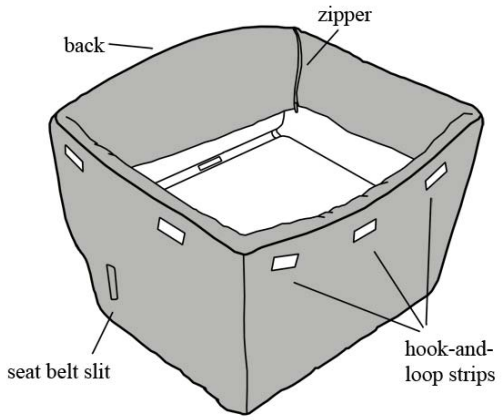

The underside of the Top Fabric Liner includes two small tags marked X and Z. Insert the top liner into the seat portion of the plastic frame so the X and Z seams on the inner liner align with the X and Z seams on the fabric outer shell. Fit the upper edge of the fabric liner over the rear wall of the plastic frame and fasten the loop tape pieces on

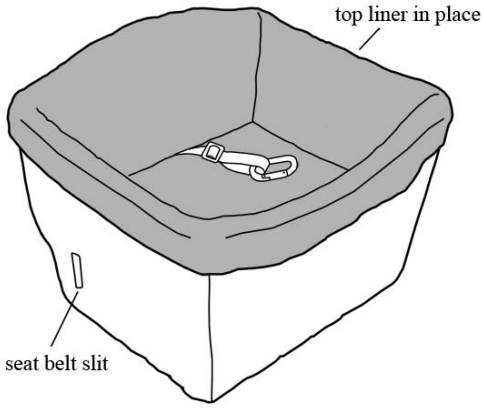

the top liner with the hook tape pieces on the outer shell. Pass the large loop end of the safety tether (opposite the carabineer), through the slit sewn into the lower edge of the back panel of the top liner and through the slit in the plastic Seat section. Fit the upper edges of the other three sides of the top liner over the edges of the plastic frame and fasten the hook and loop tape strips for each side. Finally, insert the reversible pillow.

To install in vehicle, place the Safety Seat on the vehicle seat and pass the seat belt through the holes in the fabric and plastic frame on one side of the Safety Seat. Thread the seat belt through the large loop on the end of the safety tether, all the way through the frame and out the holes on the opposite side, then buckle. Lock the seat belt by fully extending then allow the belt to retract (same procedure as that used for child safety seats). Tug the safety tether firmly to make sure it is attached to the seat belt and adjust to desired length. Place pet in the Safety Seat, attach the tether, and it's ready to go! For multiple pets, extra tethers are available – contact Solvit customer service at the number below.

Safety: We recommend using a harness, rather than a collar, when traveling. The safety tether can be attached to any harness, but for maximum safety, we recommend the Solvit Deluxe Vehicle Safety Harness, sold separately.

Cleaning: Fabric pieces can be machine washed in cold - machine dry without heat or line dry.

Limited Lifetime Warranty: The Pet Safety Seat is warranted to be free from defects in materials or workmanship for the life of the product. Some restrictions apply, so please visit our website for more details. A copy of the original sales receipt is required for warranty issues.

Solvit Products is dedicated to offering innovative solutions to improve pets' quality of life. Please feel free to contact us with and questions, comments, or warranty issues. Thank you for your purchase!

SOLVIT Products, LP ♦ 1114 W Harris Rd, Suite 101 ♦ Arlington, TX 76001
Tel: 866-6-SOLVIT (866-676-5848) ♦ Fax: (817) 466-2291
Email: customerservice@solvitproducts.com ♦ www.solvitproducts.com